Model	DP-08136W
SIZE	800*800*750MM
SHEET OF SHEETS	1 OF 1

NO.	Graphic	Size	Quanlity
A		Ø6*14	4
B			4

A	4 PCS
B	4 PCS

Step1

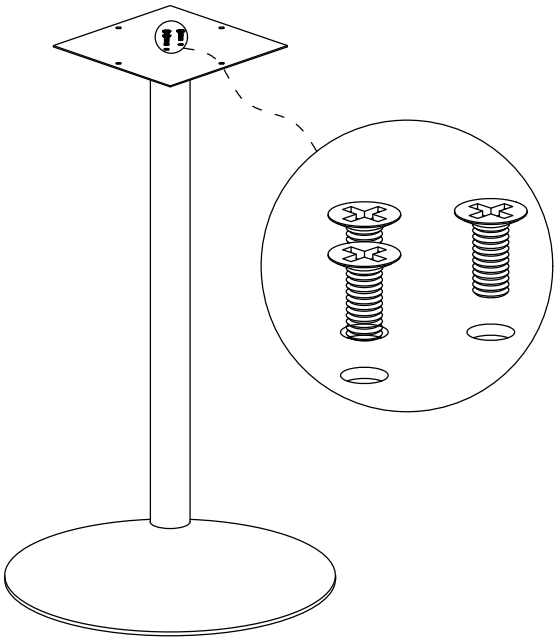

Step2

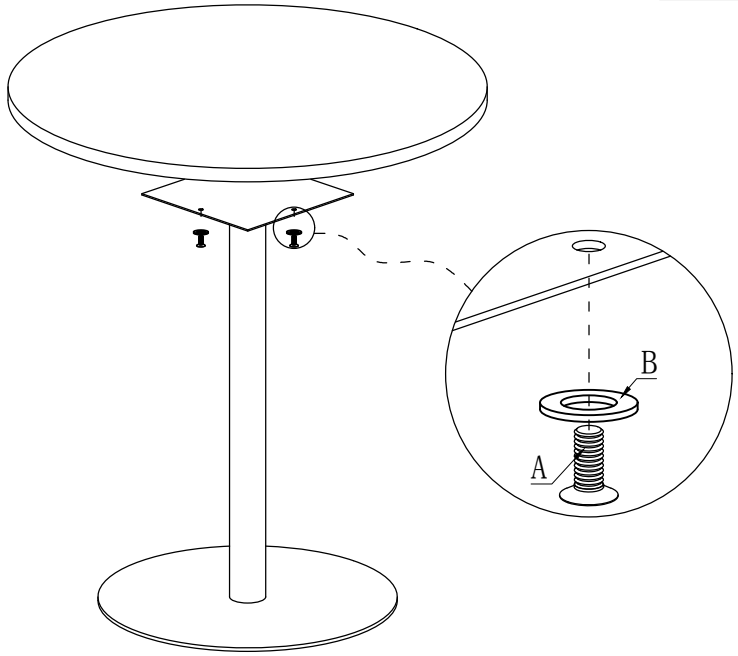
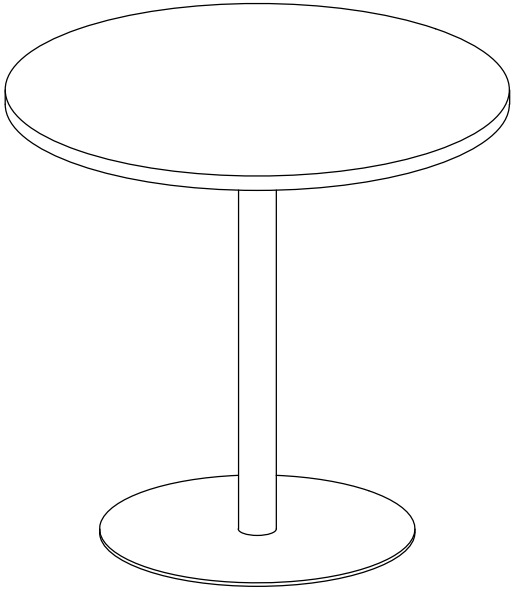
Finish