TV Bracket

Installation Instructions

Note: We recommend that this product be installed only by professional installers in accordance with the installation instructions. For installation information or if you have any questions, please contact the seller for expert assistance!

Warning:

1.For safety reasons, the wall or mounting surface must be capable of supporting the combined weight of the mount and the display. Otherwise, the structure must be reinforced.
2.Ensure that no electrical wires, water pipes, or gas lines are located behind the intended wall area.
3.The installation environment must be properly assessed. Failure to do so may result in property damage, serious injury, or even death.

Tool List					
M7*70	X6		X6	20mm	X4
M5*50	X2	M8*30	X4	M6*30	X4
Level	X1		X2		X1

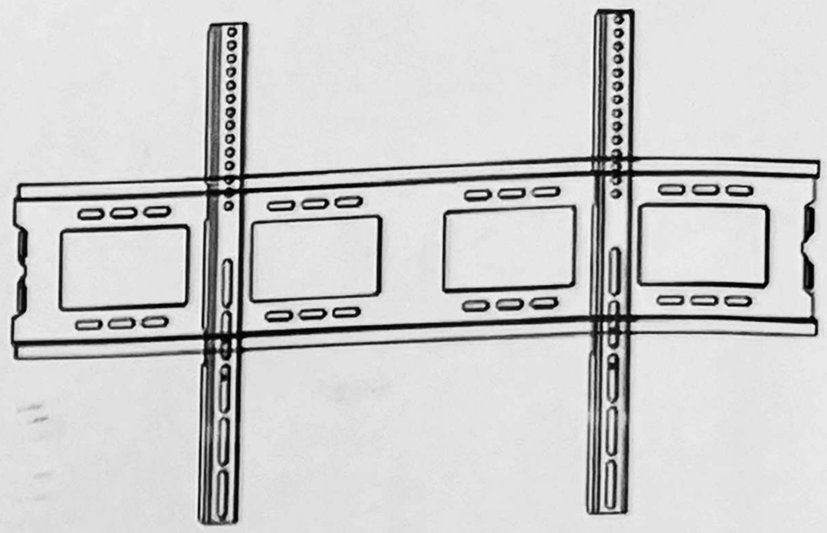

Due to variations in TV models and hole patterns, the provided screws may not be universally compatible. If any screws are unsuitable, please purchase appropriately sized installation screws from a hardware store.

Installation Instructions

STEP1-A Installation of solid concrete walls

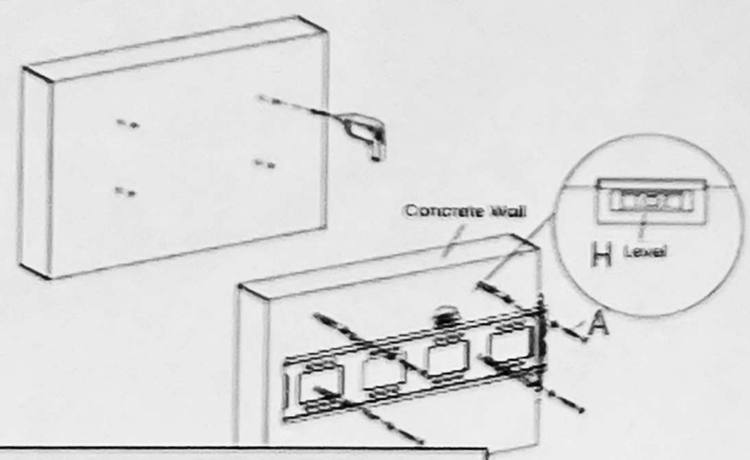

Fix the base to the wall with an impact drill.

Bit M10

STEP1-B Installation of Wooden Wall Studs

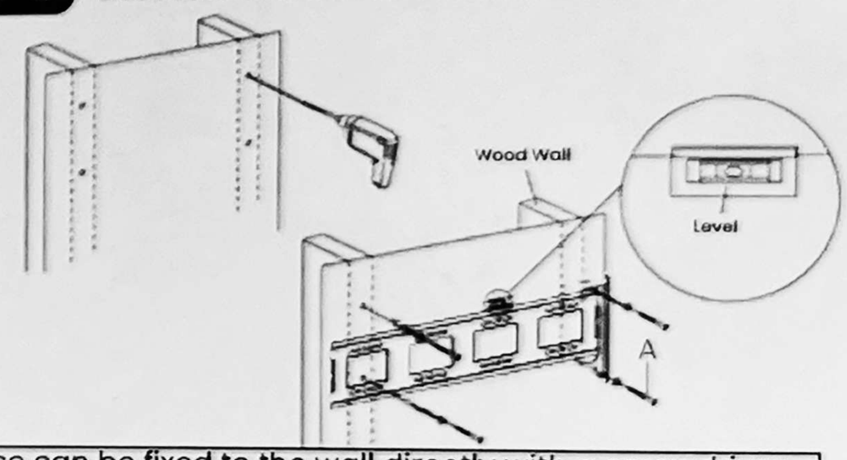

The base can be fixed to the wall directly with a screwdriver, without the need for drilling holes with an impact drill.

STEP2 Mount the bracket to the TV

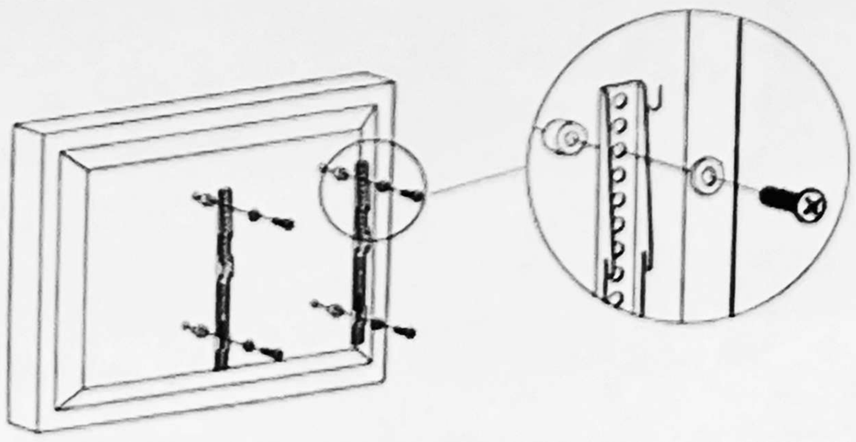

Options are available based on the TV's screw hole positions.

STEP3 Secure the TV to the bracket on the wall

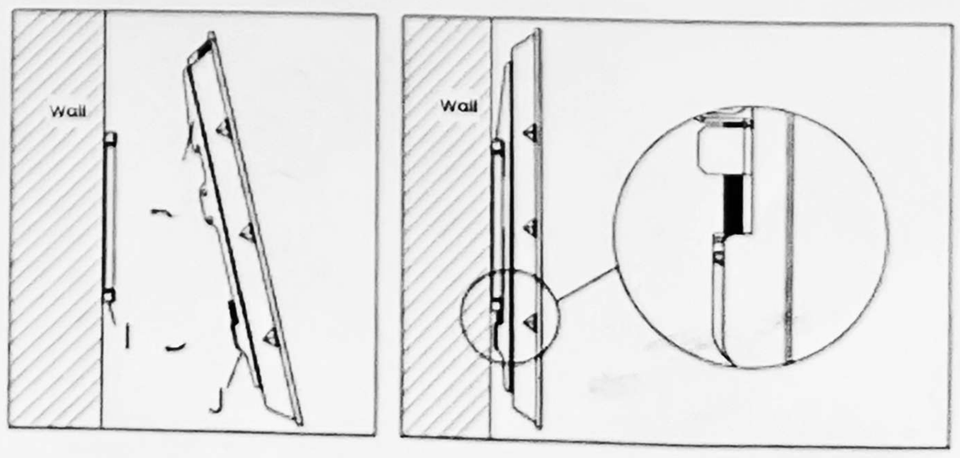

1.Hole Spacing Measurement:
Most TVs have four VESA-standard mounting holes on the back for connecting to brackets. Before installation, measure the hole spacing to select a bracket compatible with the specific hole pattern.
2.Weight Capacity:
Each TV bracket is labeled with a maximum weight capacity. It can be used as long as the weight of the TV (without the stand) falls within this range.
3.TV Back Surface:
While most modern TVs have flat backs suitable for mounting, some may have protruding components or ports that could be blocked by the bracket. Such TVs are not suitable for wall mounting.
4.Wall Requirements:
Solid surfaces such as concrete, solid brick, thick solid wood, or load-bearing walls of equivalent strength are suitable for mounting. However, special surfaces like marble, tiled walls, drywall (plasterboard), hollow bricks, thin wood panels, or glass cannot support direct mounting. For these, consider embedded mounting methods or use a movable stand.
5.Recommended Height:
The vertical height from the center of the TV screen to the floor should ideally be between 1.1 meters and 1.3 meters.